3mx12m Gala Tent Assembling Instruction-PE

-Parts List-

Quantity		Description
14	A	Rafter
18	B	Apex and eave pole
14	C	Leg
14		Base plate
6		3 way joint
15		4 way joint
14		Nut and bolt
4		Guy lines
78		Bolt
156		Bungee
4		Peg Ø6x275mm
134		Peg Ø4.5x180mm
		End panel
		Wall panel
1		Roof
10		Middle leg

1

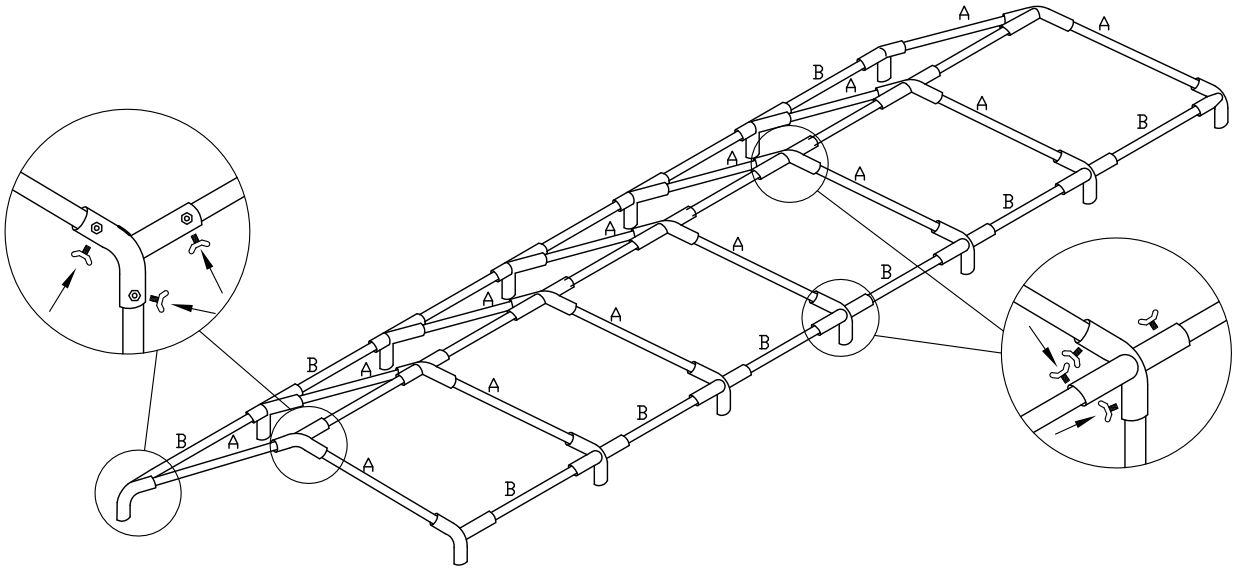

2

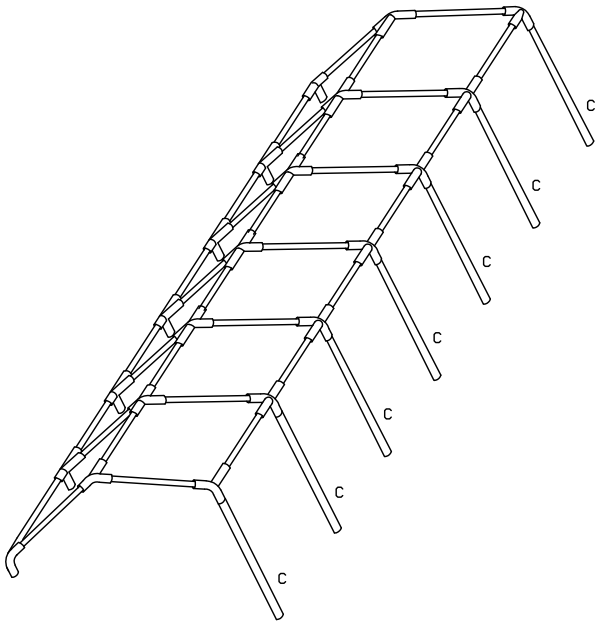

3

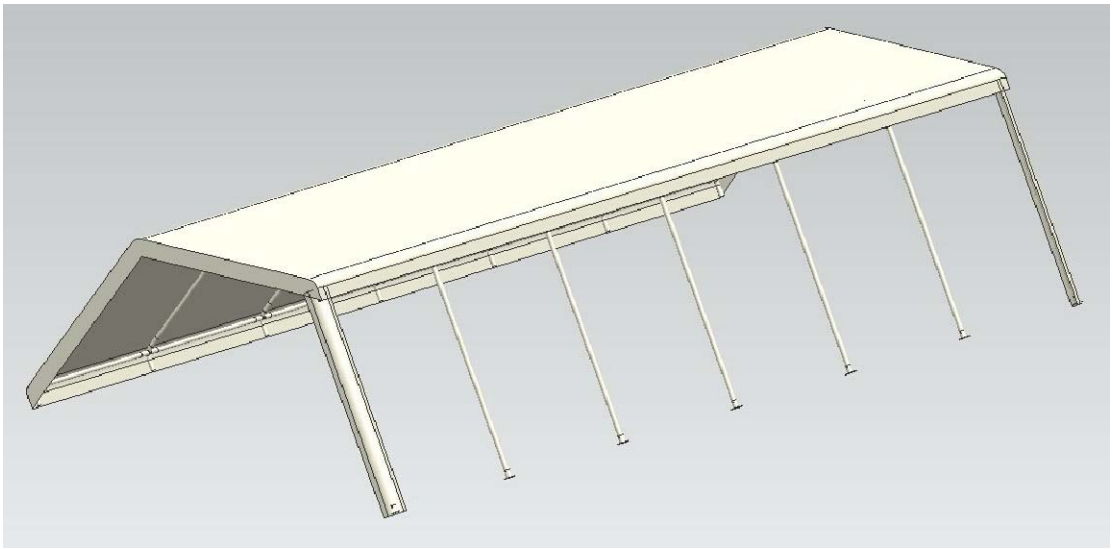

4

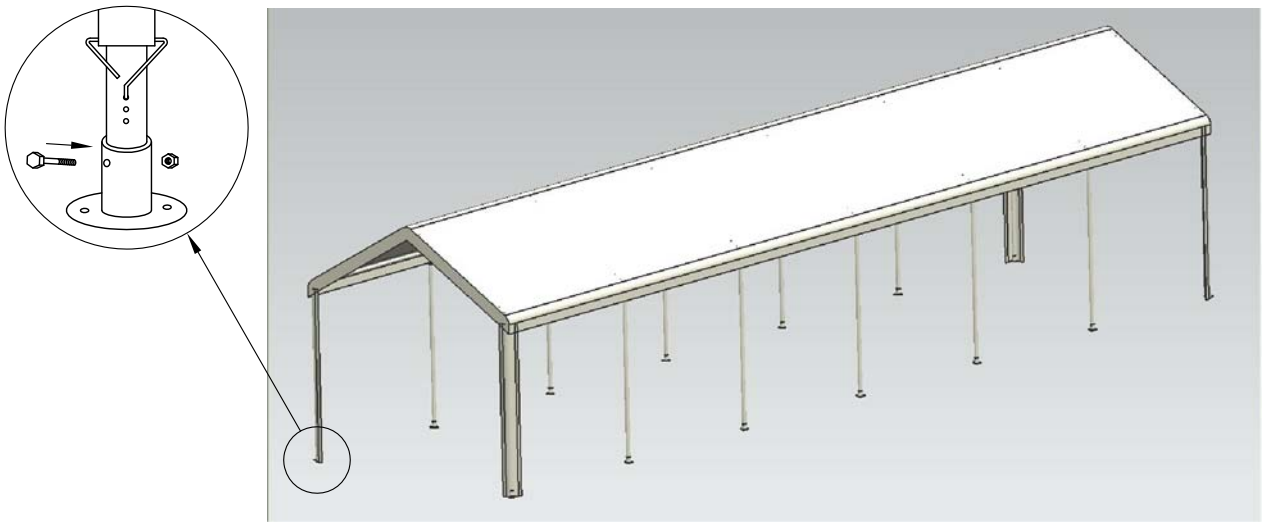
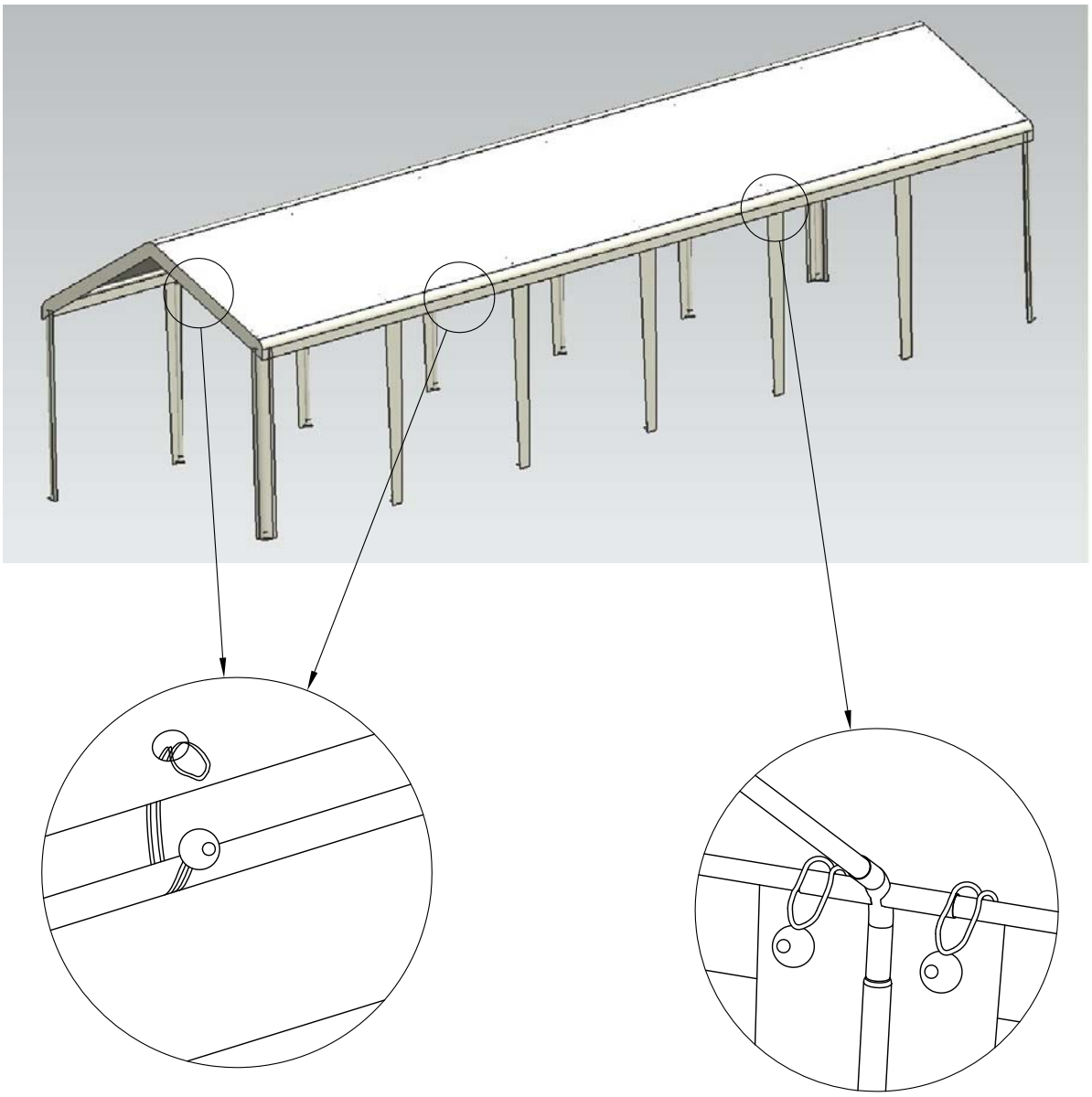
5